The Interpretive Lens

A Pattern-Based Guide to Perception, Meaning, and Leadership

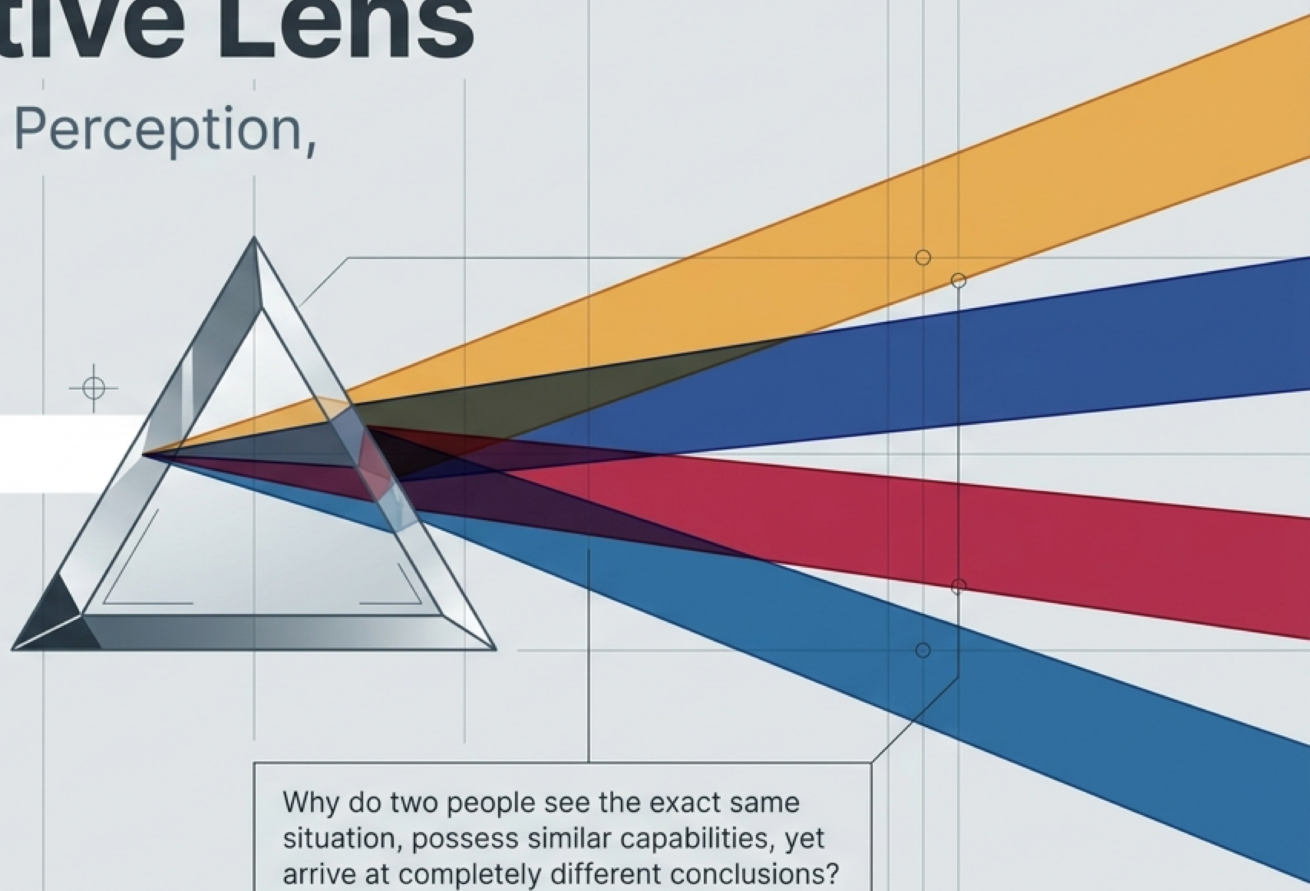

Why do two people see the exact same situation, possess similar capabilities, yet arrive at completely different conclusions?

TW ਟੈਲੈਂਟ ਵਿਸਪਰਰਸ

We Do Not Respond to Reality. We Respond to Our Interpretation.

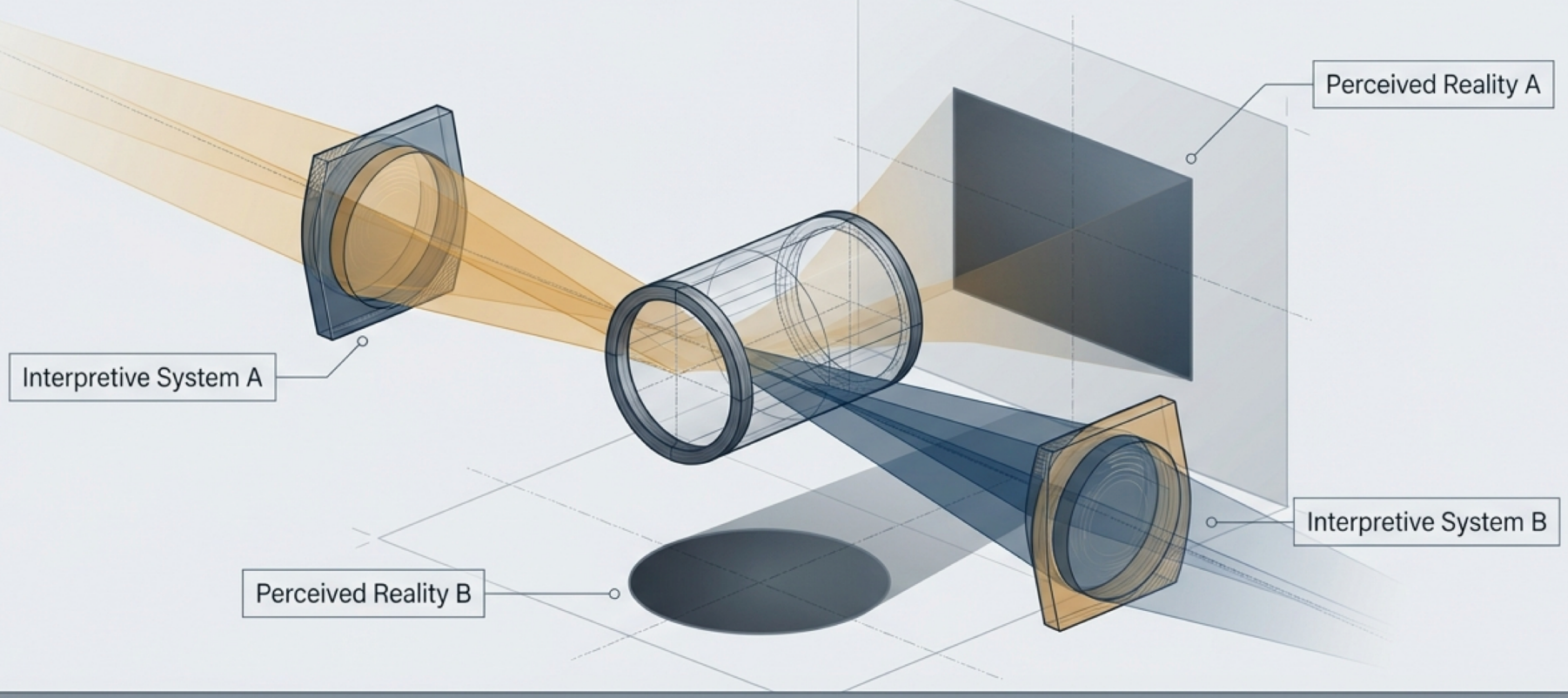

Insight Box

Differences in perception are rarely failures of reasoning or intelligence. They are the natural result of divergent interpretive systems projecting different meanings from the same objective data.

ਟੈਲੈਂਟ ਵਿਸਪਰਰਸ

The Missing Variable in Decision-Making

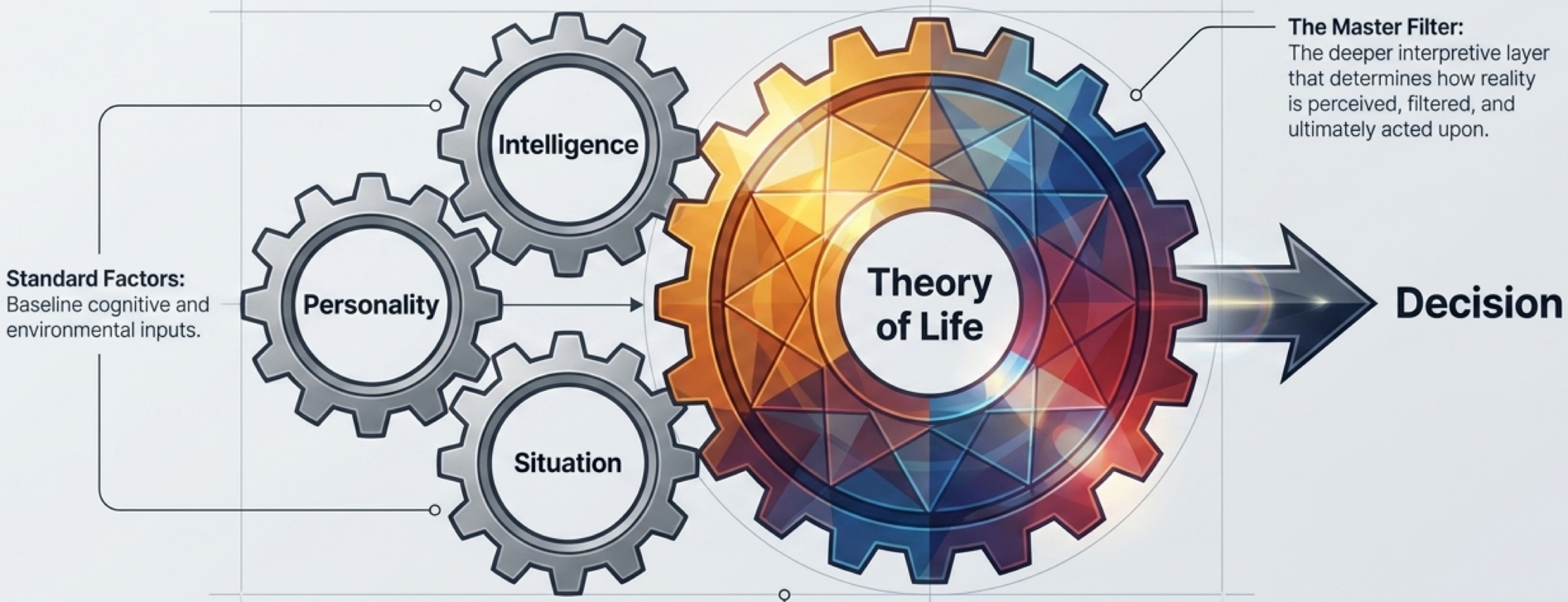

Decision = Intelligence × Personality × Situation × Theory of Life

ਟੈਲੈਂਟ ਵਿਸਪਰਰਸ

The Anatomy of an Interpretive System

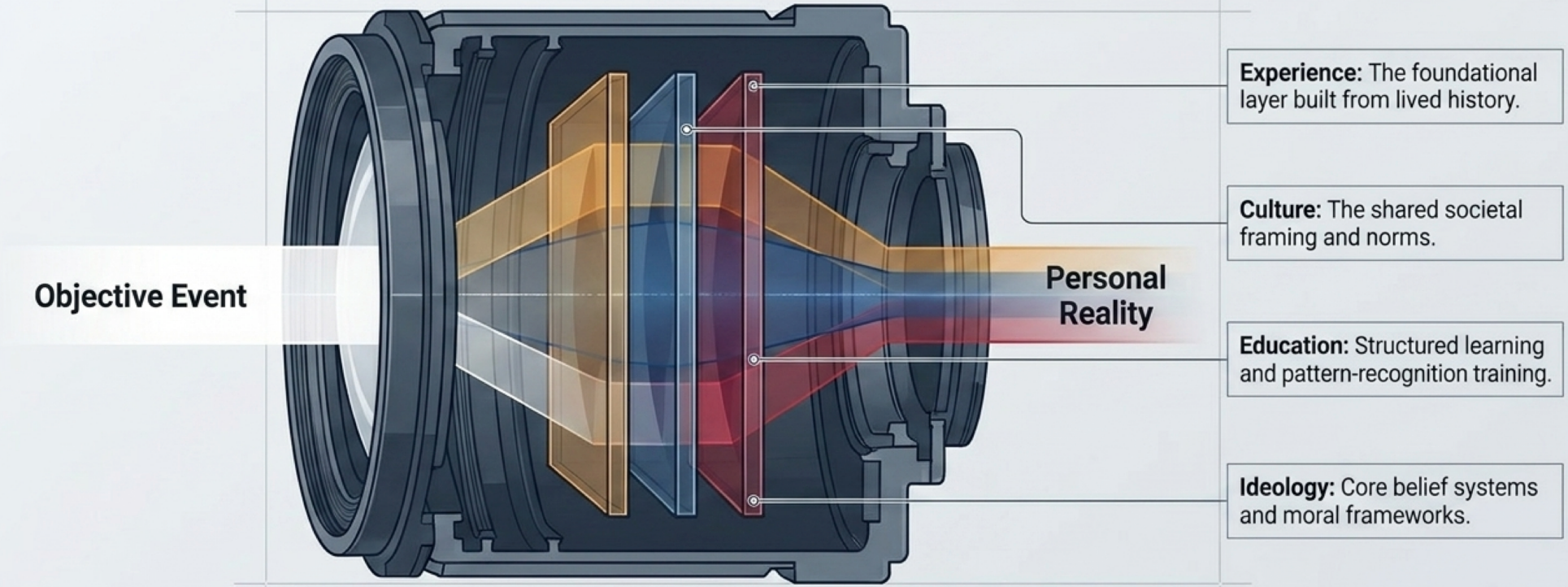

These four schemas fuse together to build a custom lens. The output is a personalized reality.

ਟੈਲੈਂਟ ਵਿਸਪਰਰਸ

A Parallel Lens: The Systemic Architecture of Sikh Philosophy

Personal Reality
(The Projection)

Mann (The Processor Layer)
The Interpreting Mind. Organizes, filters, and assigns meaning based on lived exposure.

Haumai (The Distortion Layer)
The Ego Filter. A biasing system that centers interpretation around the self, amplifying some patterns while ignoring others.

Hukam (The Underlying Order)
Objective Reality. Not directly perceived, but inferred.

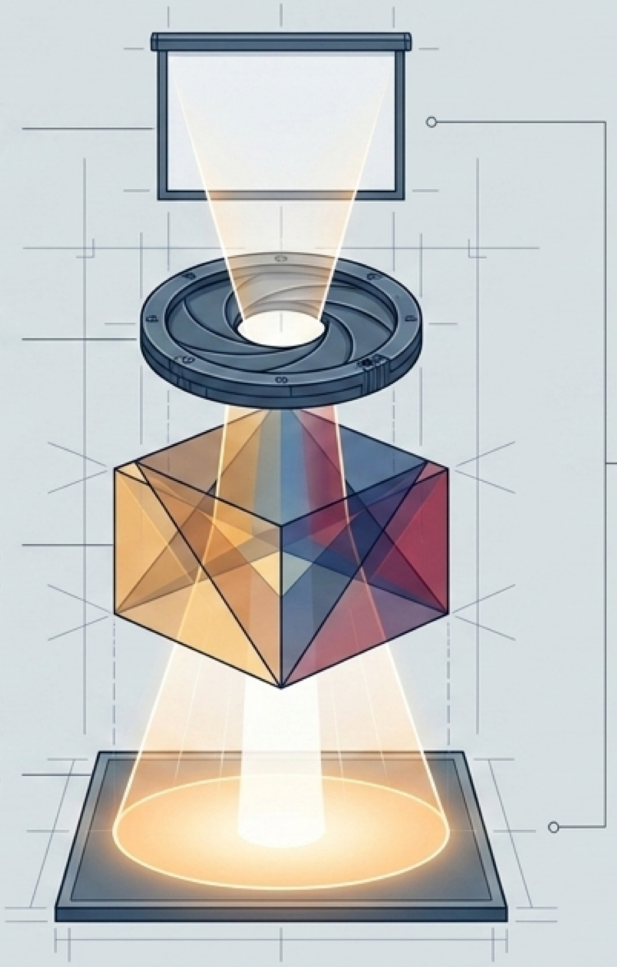

Sikh thought identified this exact cognitive framework centuries ago, emphasizing that what we experience is reality interpreted through our internal state.

ਟੈਲੈਂਟ ਵਿਸਪਰਰਸ

Diagnostic Symmetry Across Eras and Cultures

Theory of Life (Modern Behavioral Science)		Sikh Philosophy (Eastern Wisdom)
Objective Reality (The baseline event)	**Dimension 1:** The Underlying Structure	**Hukam** (The deeper underlying underlying order)
Interpretive Schemas (Experience, Culture, Ideology)	**Dimension 2:** The Biasing Filter	**Haumai** (Ego-centric biasing system)
Cognitive Filtering	**Dimension 3:** The Processor	**Mann** (The interpreting mind)

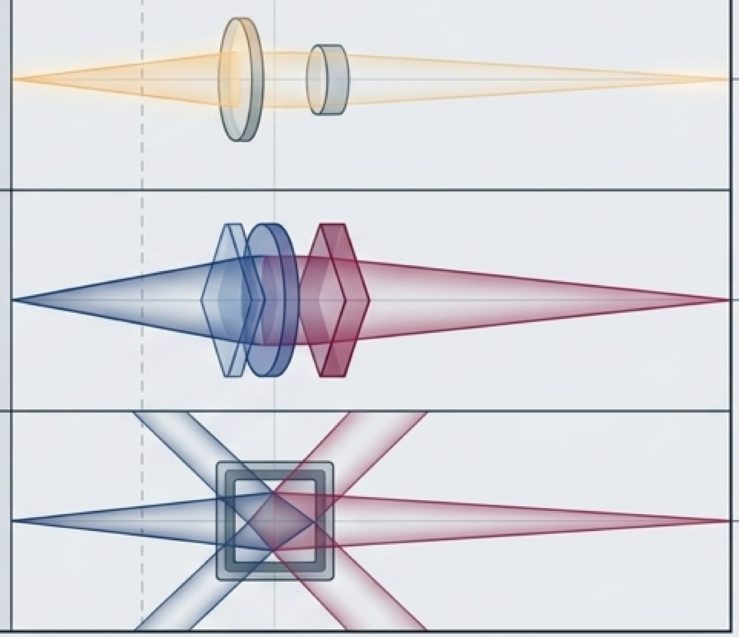

Conclusion Bar: Two disparate disciplines converging on a single universal truth: **access to truth is completely mediated by interpretation.**

Language is a Pattern-Recognition System

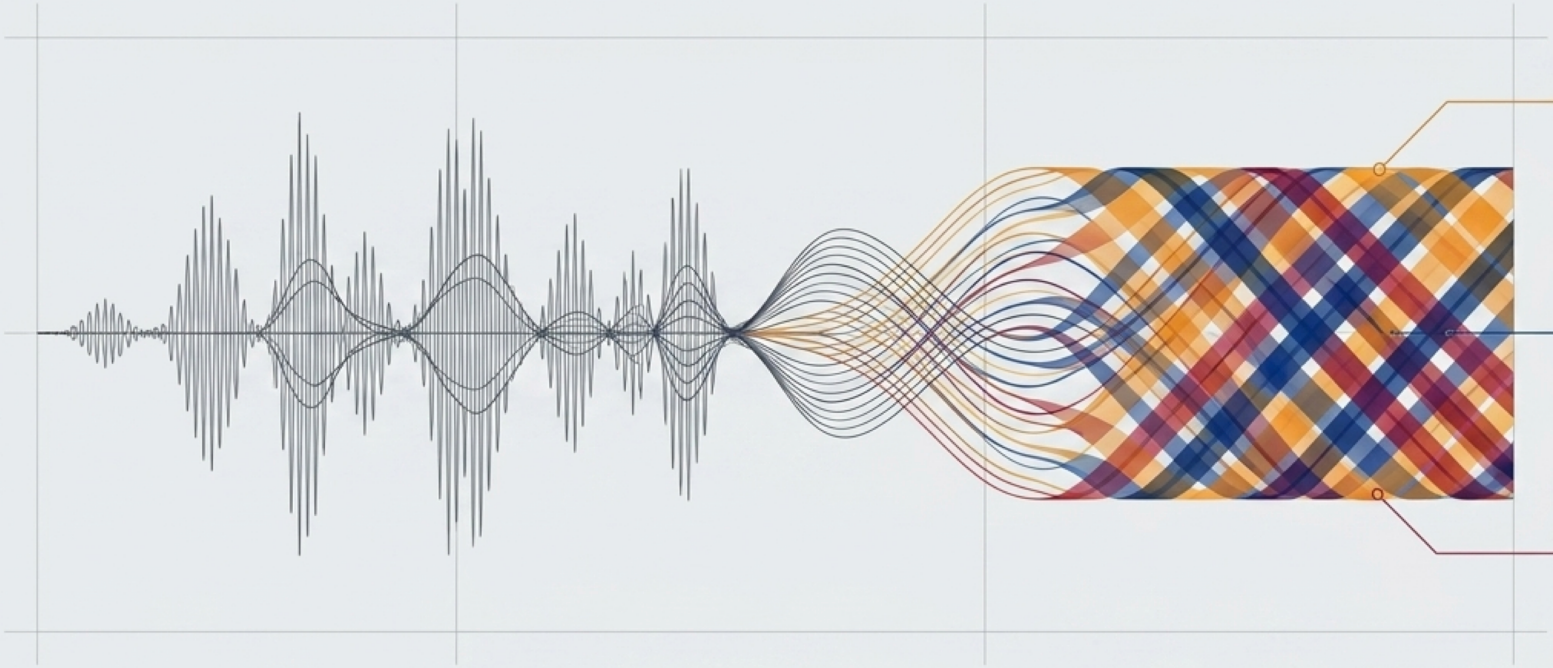

Tone & Cadence: Convey meaning separate from the actual words.

Emotional Context: Shapes how the message is received.

Delivery Variation: Expressions radically shift meaning based on rhythm and emphasis.

The Punjabi language is highly pattern-rich. Communication operates not just through the exchange of data, but through a tapestry of delivery mechanisms where rhythm and context carry primary weight.

ਟੈਲੈਂਟ ਵਿਸਪਰਰਸ

Shabad: Communication Beyond Literal Definitions

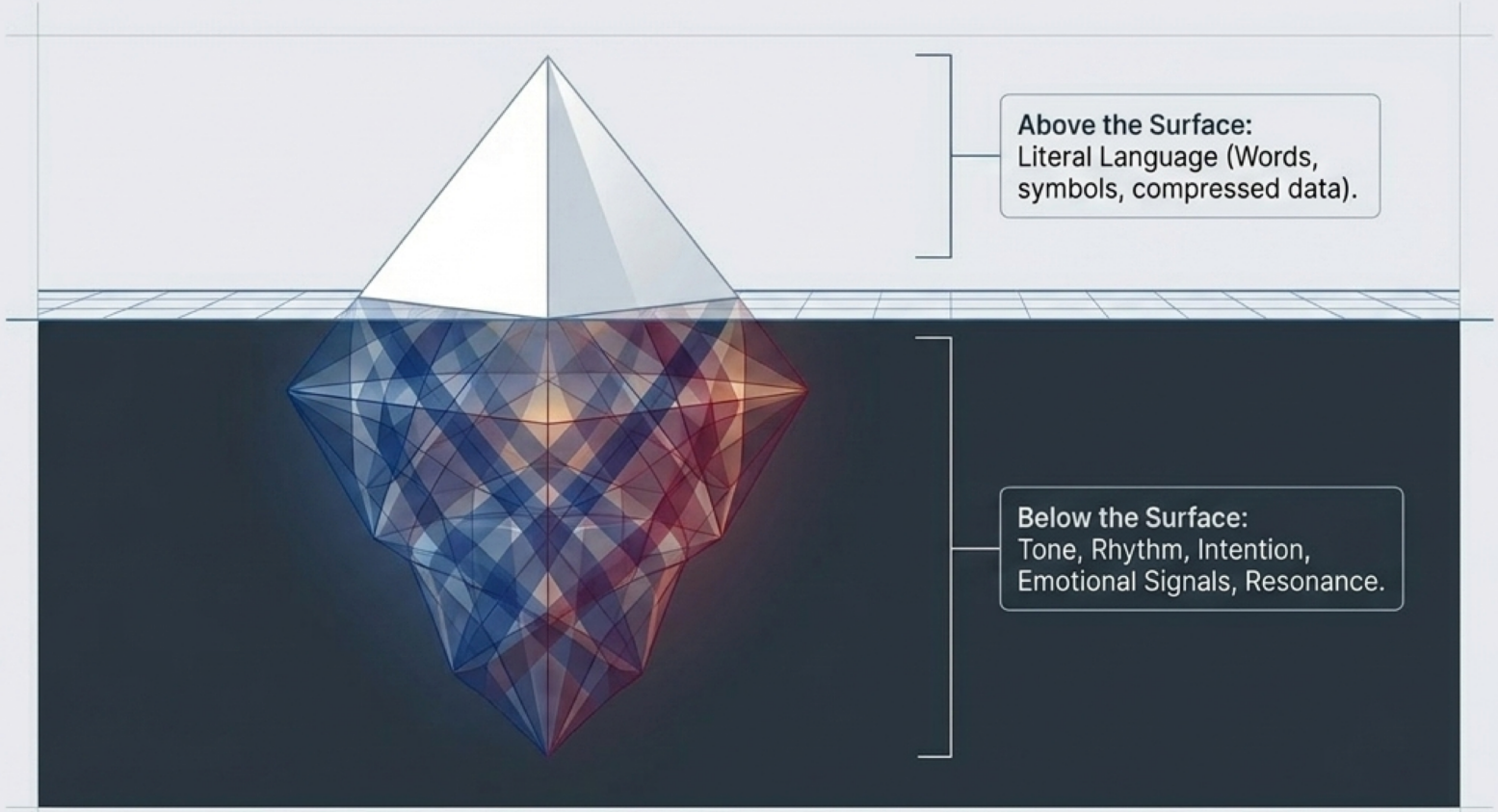

Context Box:
Human communication does not begin with structured language. The concept of Shabad represents patterned sound that carries profound meaning beyond literal definitions.

We are, at our core, pattern-recognition machines.

ਟੈਲੈਂਟ ਵਿਸਪਰਰਸ

Vectors of Influence: The Fluidity of Interpretation

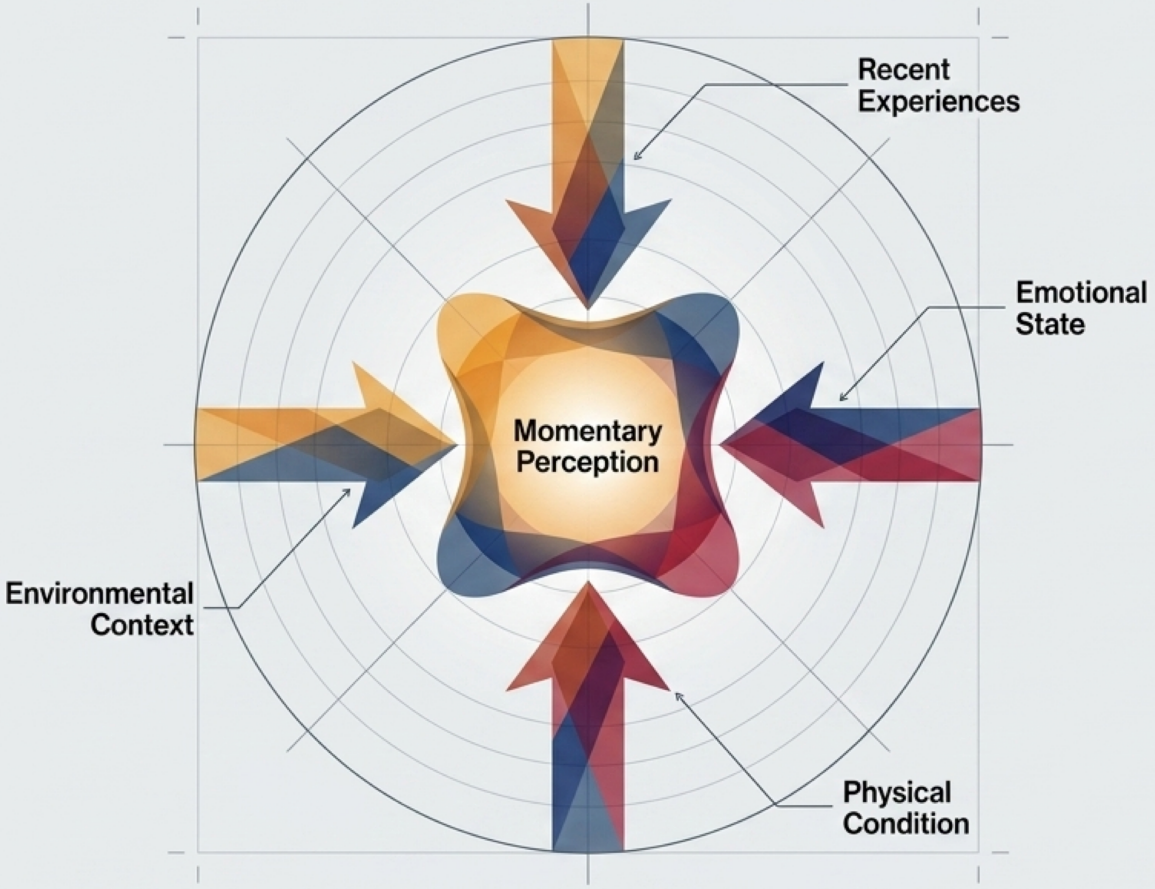

The exact same interaction can feel entirely different on different days, even with the same people.

Sikh philosophy explicitly acknowledges this fluidity through its emphasis on awareness—perception evolves continuously with attention and reflection.

ਟੈਲੈਂਟ ਵਿਸਪਰਰਸ

The Architecture of Parallel Realities

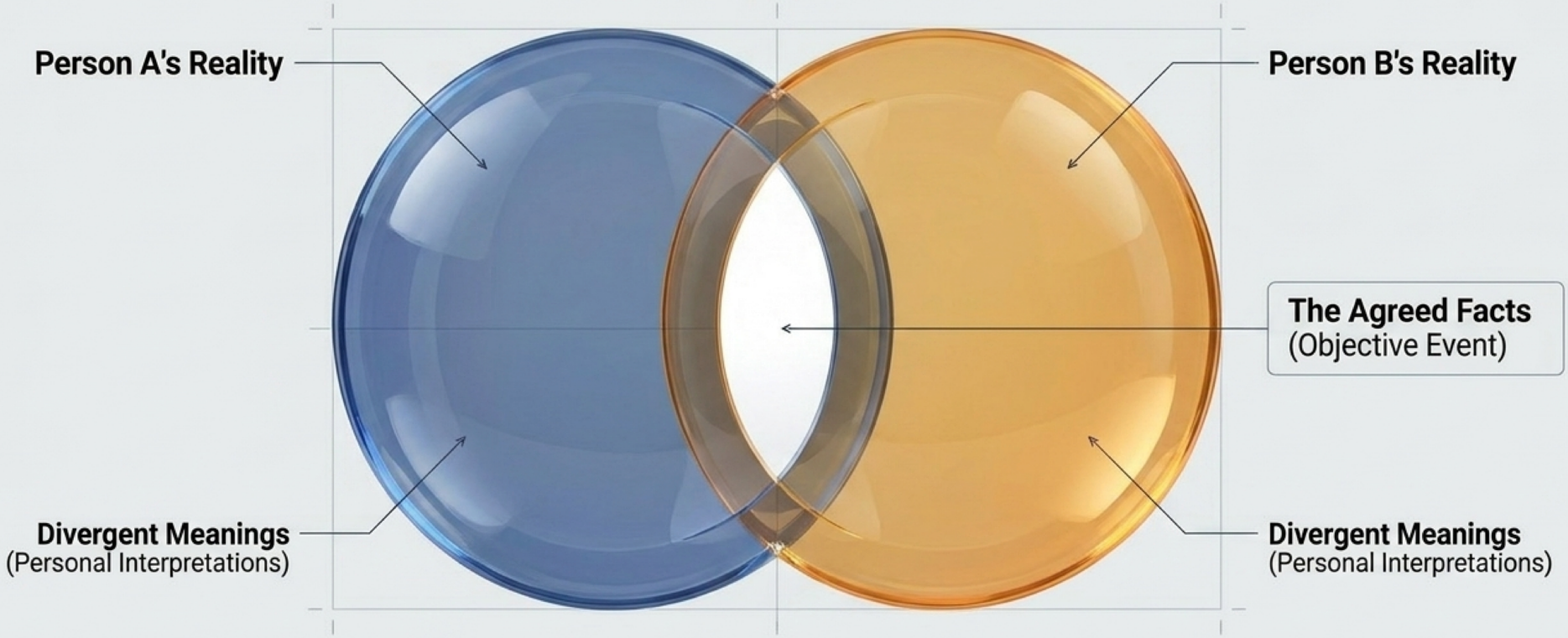

Takeaway: Two people can observe the exact same event and agree entirely on the facts, yet disagree entirely on the meaning. Understanding this reduces conflict: the question shifts from "Who is right?" to "What shaped their perspective?"

ਟੈਲੈਂਟ ਵਿਸਪਰਰਸ

Leadership is the Co-Creation of Shared Meaning

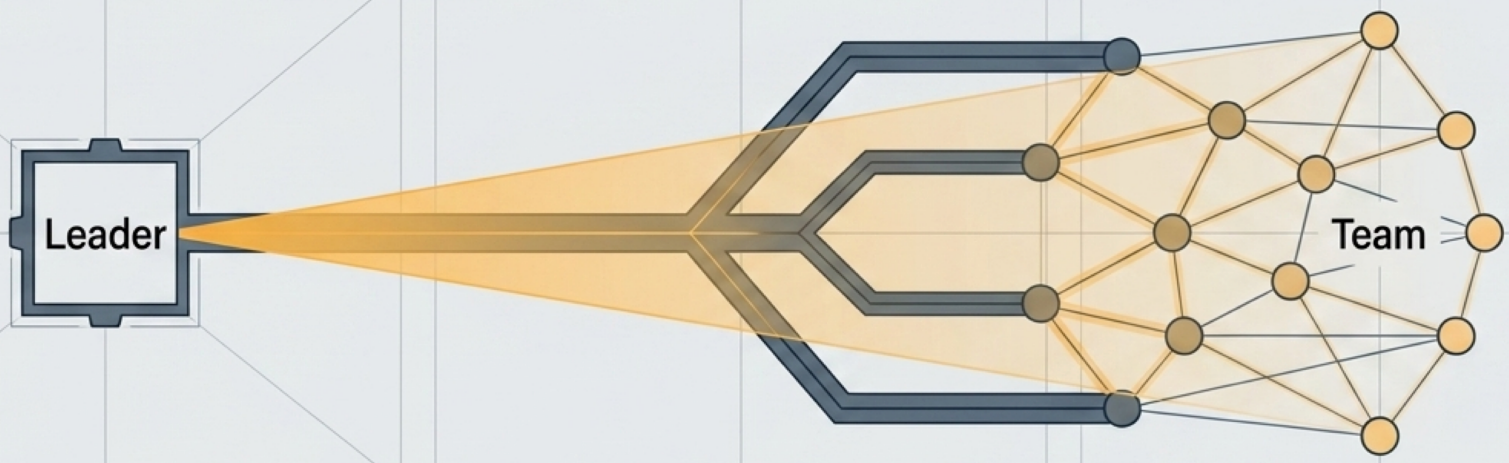

1.
Organizational Culture
Embedding shared patterns of behavior.

2.
Defining Success/Failure
Framing how outcomes are perceived and valued.

3.
Navigating Uncertainty
Dictating the interpretive response to chaos.

Leaders do not just make decisions; they shape the lens through which their organization interprets reality.

TW ਟੈਲੈਂਟ ਵਿਸਪਰਰਸ

Education as Pattern Formation

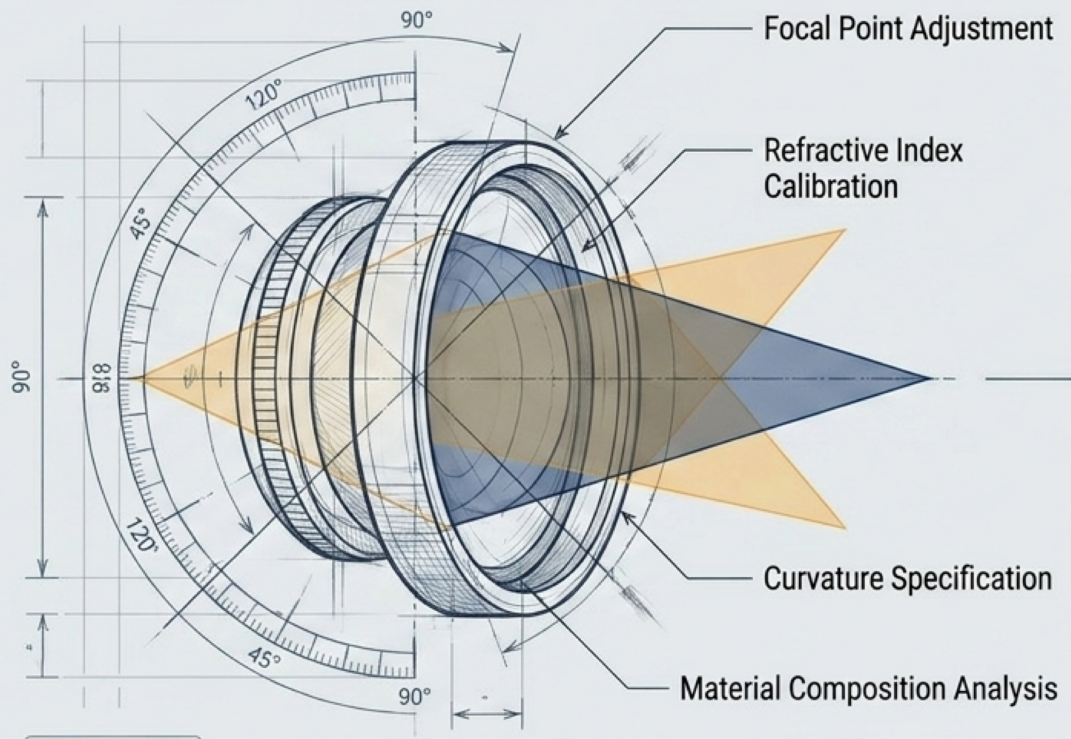

1 **Recognize Patterns**

Expanding the capacity to identify signals in the noise.

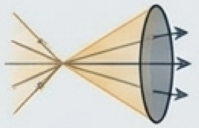

2 **Assign Meaning**

Developing rigorous, nuanced schemas for interpreting data.

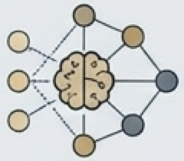

3 **Respond to Complexity**

Navigating high-variance environments with a calibrated lens.

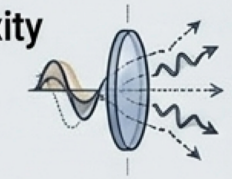

Insight Block

True education extends far beyond knowledge transfer. It is the active, **lifelong refinement of the lens** through which reality is interpreted.

ਟੈਲੈਂਟ ਵਿਸਪਰਰਸ

The Broader Intellectual Resonance

Peter Senge

Systems Thinking

Individuals and organizations operate on internalized "Mental Models" that strictly dictate perception and action.

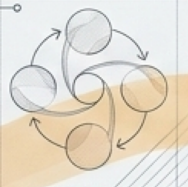

Jonathan Haidt

Moral Psychology

People do not reason toward truth; they utilize "Moral Frameworks" to justify intuitive, pre-existing interpretations.



Jonathan Haidt

Moral Psychology

People do not reason toward truth; they utilize "Moral Frameworks" to justify intuitive, pre-existing interpretations.

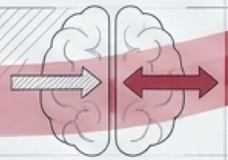

Iain McGilchrist

Neuroscience

Competing modes of hemispheric brain processing fundamentally alter the constructed interpretation of reality.

ਟੈਲੈਂਟ ਵਿਸਪਰਰਸ

A Grounded, Universal Synthesis

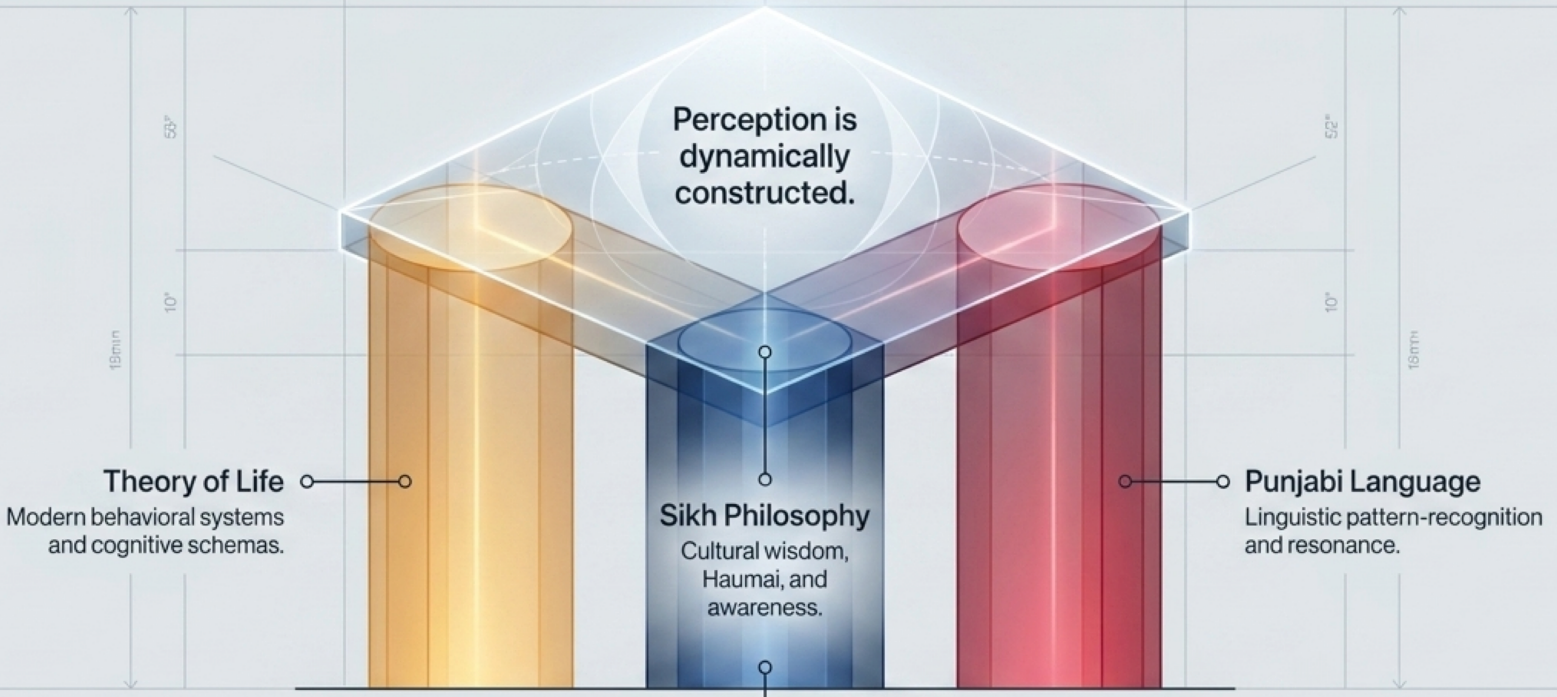

Synthesis Statement

Together, these frameworks form a coherent, non-mystical narrative. Understanding human behavior is not about finding a single objective reality—it is about recognizing the layered patterns that shape how reality is seen.

ਟੈਲੈਂਟ ਵਿਸਪਰਰਸ

The Final Lens

If two individuals can see the exact same situation, possess similar capabilities, yet arrive at completely different conclusions...



The key question is never they saw. It is how they saw it.

ਟੈਲੈਂਟ ਵਿਸਪਰਰਸ